Electrical Diagram

40A 41A 42A

CORPORATION DOORLEC

DEVANCO CANADA

19192 HAY ROAD, UNIT Q,SUMMERSTOWN, ON, K0C 2E0

Toll Free: 855-931-3334 • Fax No: 613-931-2888 • WWW.DEVANCOCANADA.COM

CORPORATION DOORLEC

ELECTRICAL DIAGRAM 40 A

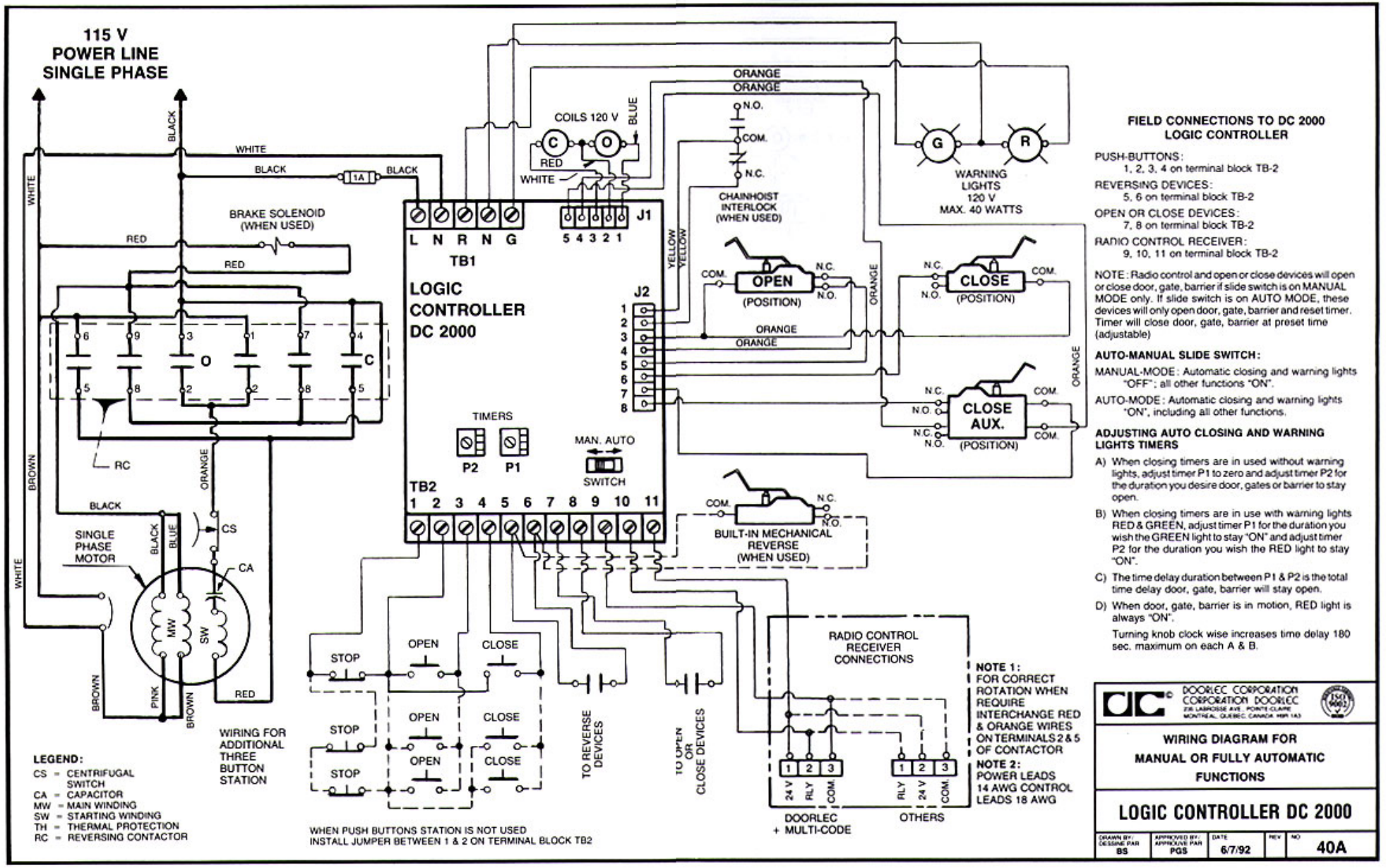

CORPORATION DOORLEC

ELECTRICAL DIAGRAM 41 A

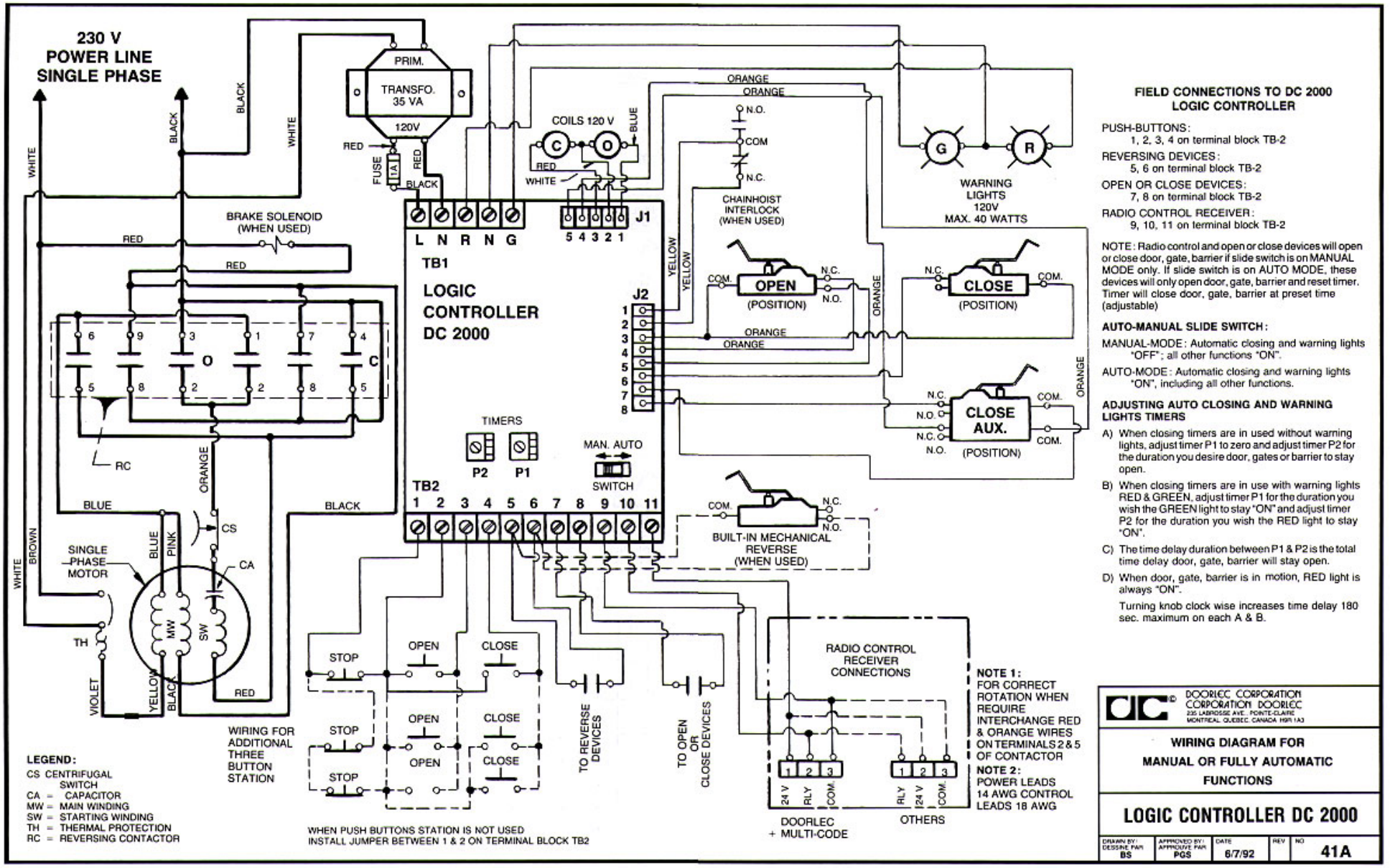

CORPORATION DOORLEC
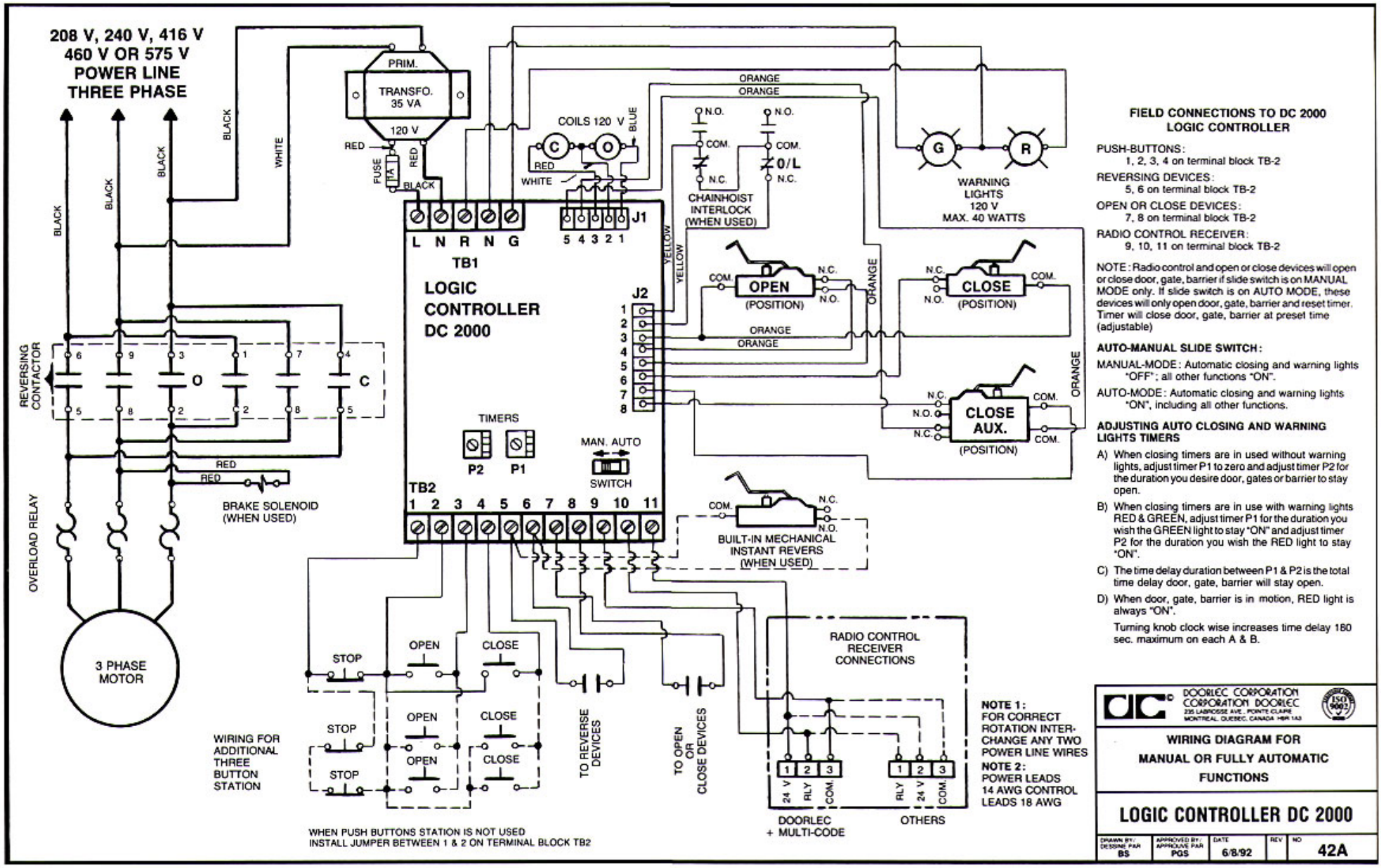
ELECTRICAL DIAGRAM 42 A